6700 FALLBROOK AVENUE

West Hills, CA 91307

MODERN OFFICE SPACE FOR LEASE

LEE & ASSOCIATES
COMMERCIAL REAL ESTATE SERVICES

JAY RUBIN
Principal
818.223.4385
jrubin@lee-re.com
DRE #01320005

EUGENE KIM
Principal
818.444.4919
ekim@lee-re.com
DRE #01521416

All information furnished regarding the property is from sources deemed reliable, but no warranty or representation is made as to the accuracy thereof. This information is submitted subject to errors, omissions, change of price or terms, prior sale or lease, or withdrawal without notice. No liability of any kind is to be imposed on the broker herein.

6700 Fallbrook Avenue
West Hills, CA

PRIME WEST HILLS
OFFICE SPACE AVAILABLE FOR LEASE

PROPERTY DETAILS

Lease Rate: $2.20 RSF Modified Gross
Utilities included. Tenant is responsible for janitorial within premises.

Parking: 2.5/1,000 SF
$85 per car per month

AVAILABILITY

SUITE	SQ. FT.	RATE	DESCRIPTION
133	±1,748	$2.20 MG	3 Window Offices, 2 Interior Offices, Bullpen, Storage
192A	±795	$2.20 MG	Available 11/1/2026
221*	±681	$2.20 MG	3 Offices
223*	±1,420	$2.20 MG	3 Window Offices, 1 Interior Office
235	±1,440	$2.20 MG	2 Window Offices, 2 Interior Offices, Bullpen, Storage
250**	±1,425	$2.20 MG	3 Offices, Kitchen, Bullpen
255**	±1,640	$2.20 MG	5 Offices, Kitchen
287	±710	$2.20 MG	1 Window Office
292	±858	$2.20 MG	2 Window Offices, Bullpen

*Suite 221 & 223 Contiguous for 2,101 RSF
**Suites 250 & 255 Contiguous for 3,065 RSF

PROPERTY HIGHLIGHTS

- Walking Distance to Restaurants, Starbucks & Retailers
- On Site Management
- Easy Access to 101 Freeway
- Move in Ready Spec Suites Available
- Beautifully Designed Common Areas
- AT&T Fiber Available

LEE & ASSOCIATES
COMMERCIAL REAL ESTATE SERVICES

All information furnished regarding the property is from sources deemed reliable, but no warranty or representation is made as to the accuracy thereof. This information is submitted subject to errors, omissions, change of price or terms, prior sale or lease, or withdrawal without notice. No liability of any kind is to be imposed on the broker herein.

6700 Fallbrook Avenue
West Hills, CA

PRIME WEST HILLS
OFFICE SPACE AVAILABLE FOR LEASE

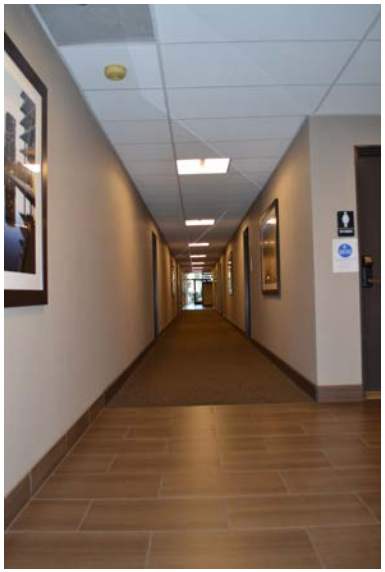

LEE & ASSOCIATES
COMMERCIAL REAL ESTATE SERVICES

All information furnished regarding the property is from sources deemed reliable, but no warranty or representation is made as to the accuracy thereof. This information is submitted subject to errors, omissions, change of price or terms, prior sale or lease, or withdrawal without notice. No liability of any kind is to be imposed on the broker herein.

FLOOR PLAN: SUITE 133 - 1,748 RSF

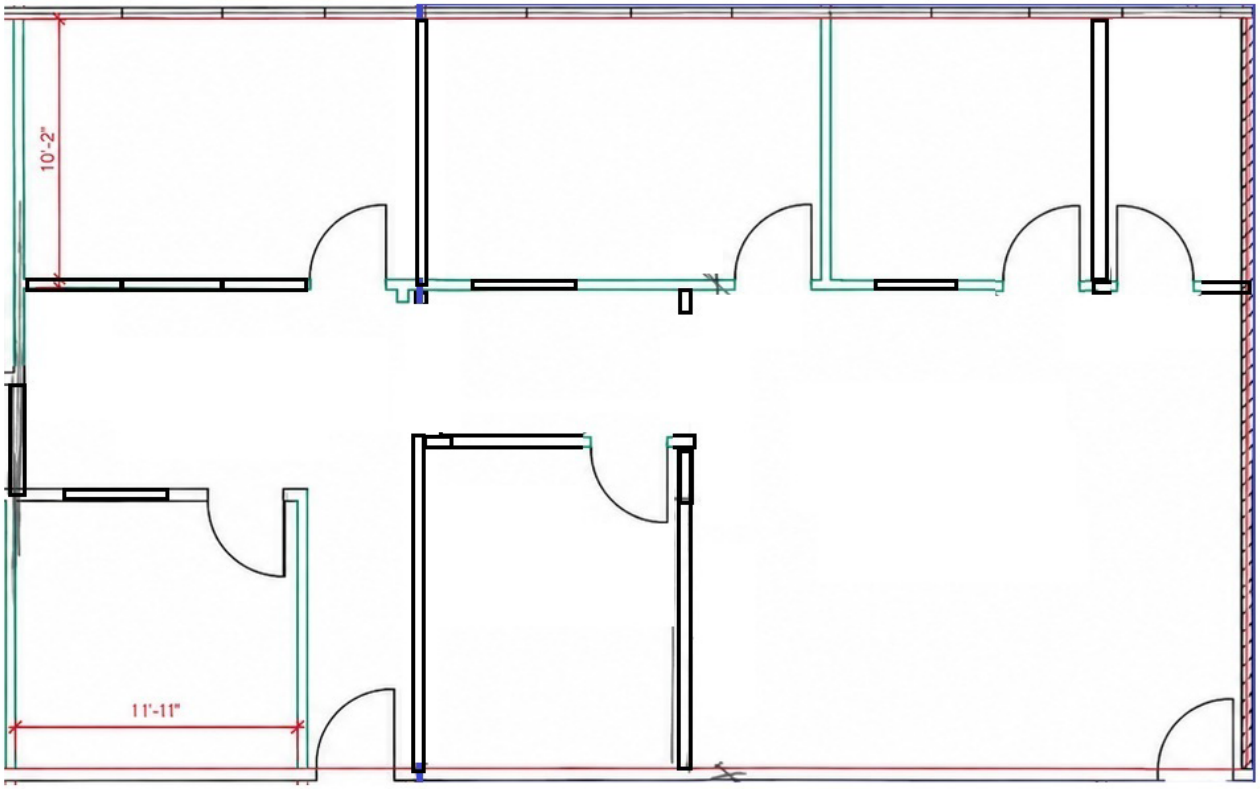

NOT TO SCALE

LEE & ASSOCIATES
COMMERCIAL REAL ESTATE SERVICES

All information furnished regarding the property is from sources deemed reliable, but no warranty or representation is made as to the accuracy thereof. This information is submitted subject to errors, omissions, change of price or terms, prior sale or lease, or withdrawal without notice. No liability of any kind is to be imposed on the broker herein.

FLOOR PLAN: SUITE 192A - 795 RSF

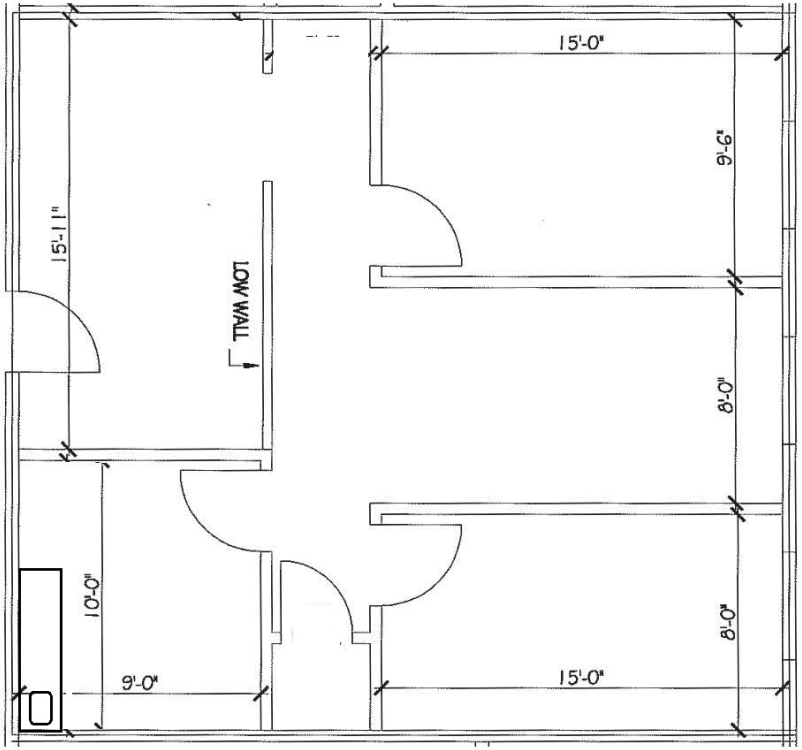

NOT TO SCALE

LEE & ASSOCIATES
COMMERCIAL REAL ESTATE SERVICES

All information furnished regarding the property is from sources deemed reliable, but no warranty or representation is made as to the accuracy thereof. This information is submitted subject to errors, omissions, change of price or terms, prior sale or lease, or withdrawal without notice. No liability of any kind is to be imposed on the broker herein.

FLOOR PLAN: SUITE 221 - 681 RSF

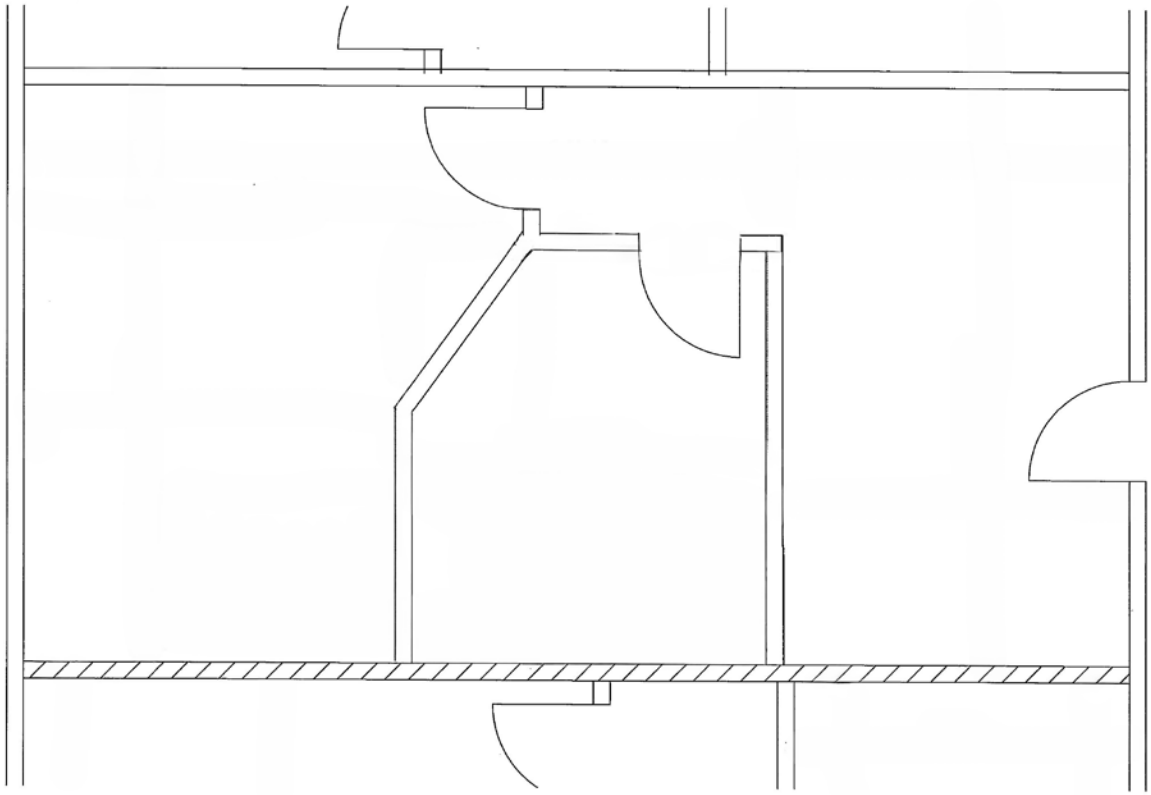

NOT TO SCALE

LEE & ASSOCIATES
COMMERCIAL REAL ESTATE SERVICES

All information furnished regarding the property is from sources deemed reliable, but no warranty or representation is made as to the accuracy thereof. This information is submitted subject to errors, omissions, change of price or terms, prior sale or lease, or withdrawal without notice. No liability of any kind is to be imposed on the broker herein.

FLOOR PLAN: SUITE 223 - 1,420 RSF

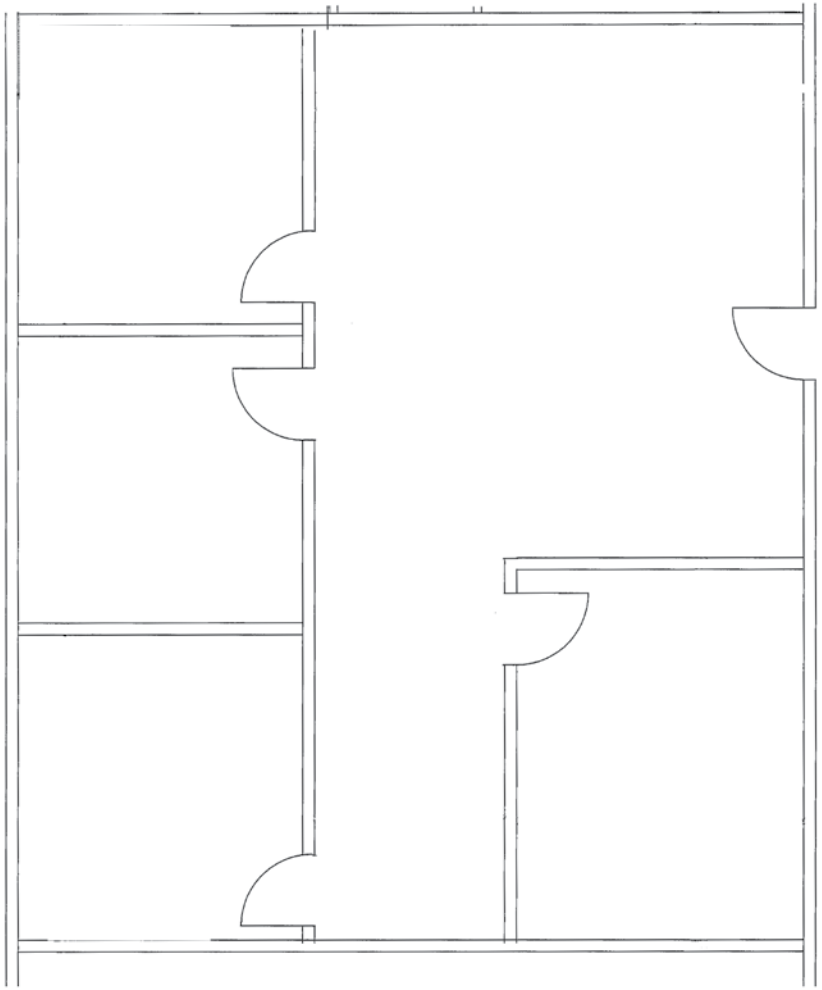

NOT TO SCALE

LEE & ASSOCIATES
COMMERCIAL REAL ESTATE SERVICES

All information furnished regarding the property is from sources deemed reliable, but no warranty or representation is made as to the accuracy thereof. This information is submitted subject to errors, omissions, change of price or terms, prior sale or lease, or withdrawal without notice. No liability of any kind is to be imposed on the broker herein.

6700 Fallbrook Avenue
West Hills, CA

PRIME WEST HILLS
OFFICE SPACE AVAILABLE FOR LEASE

FLOOR PLAN: SUITE 235 - 1,440 RSF
Move in Ready Spec Suite Available!
Spec Suites Features New Kitchenette

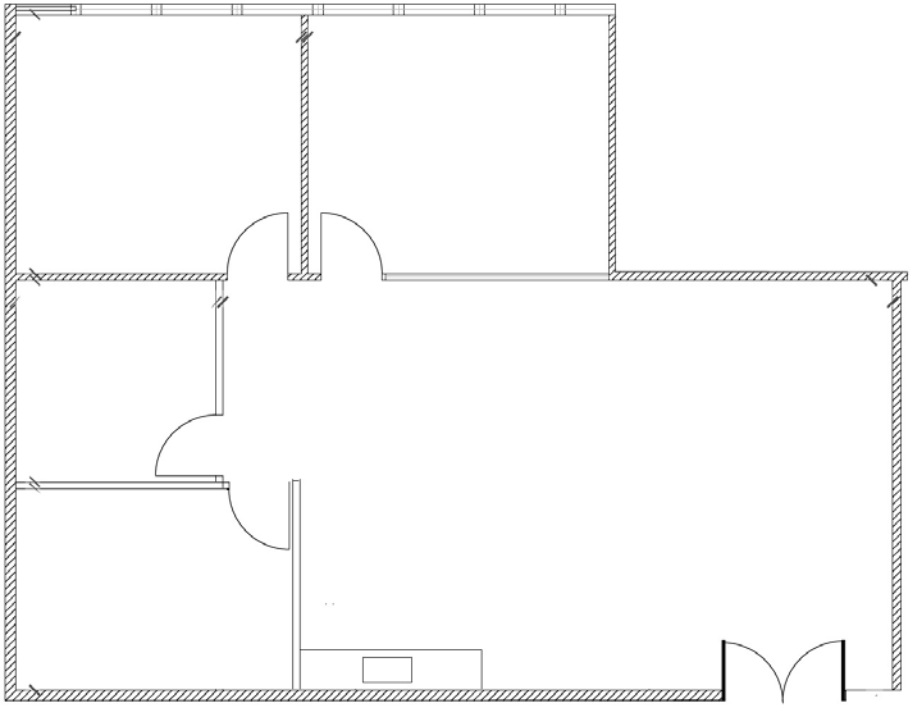

NOT TO SCALE

LEE & ASSOCIATES
COMMERCIAL REAL ESTATE SERVICES

All information furnished regarding the property is from sources deemed reliable, but no warranty or representation is made as to the accuracy thereof. This information is submitted subject to errors, omissions, change of price or terms, prior sale or lease, or withdrawal without notice. No liability of any kind is to be imposed on the broker herein.

FLOOR PLAN: SUITE 250 - 1,425 RSF

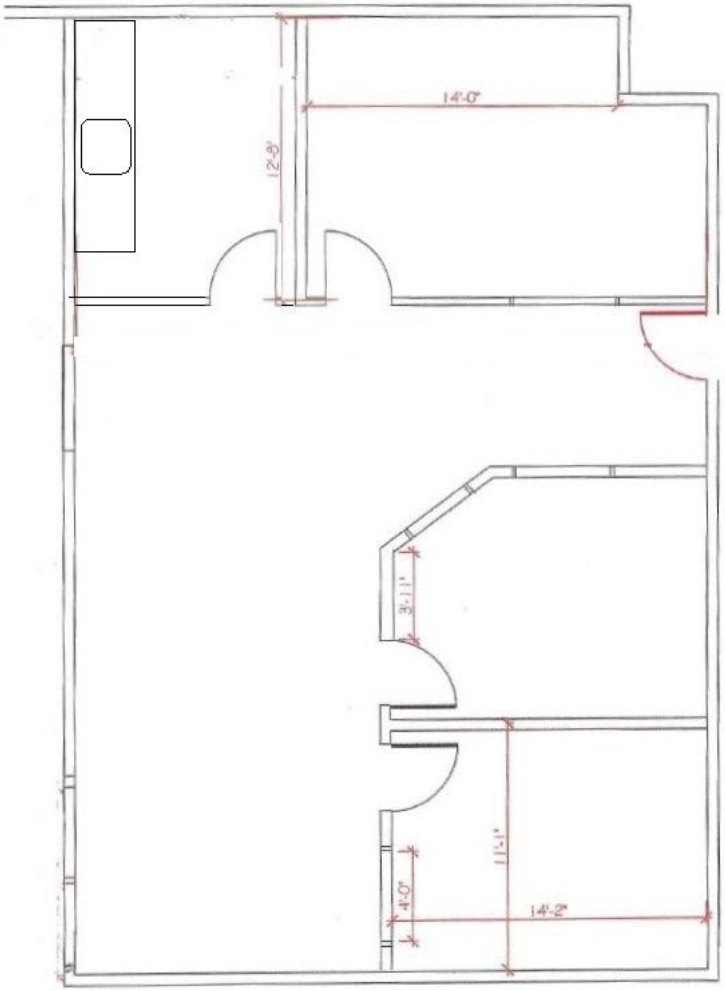

NOT TO SCALE

LEE & ASSOCIATES
COMMERCIAL REAL ESTATE SERVICES

All information furnished regarding the property is from sources deemed reliable, but no warranty or representation is made as to the accuracy thereof. This information is submitted subject to errors, omissions, change of price or terms, prior sale or lease, or withdrawal without notice. No liability of any kind is to be imposed on the broker herein.

FLOOR PLAN: SUITE 255 - 1,640 RSF

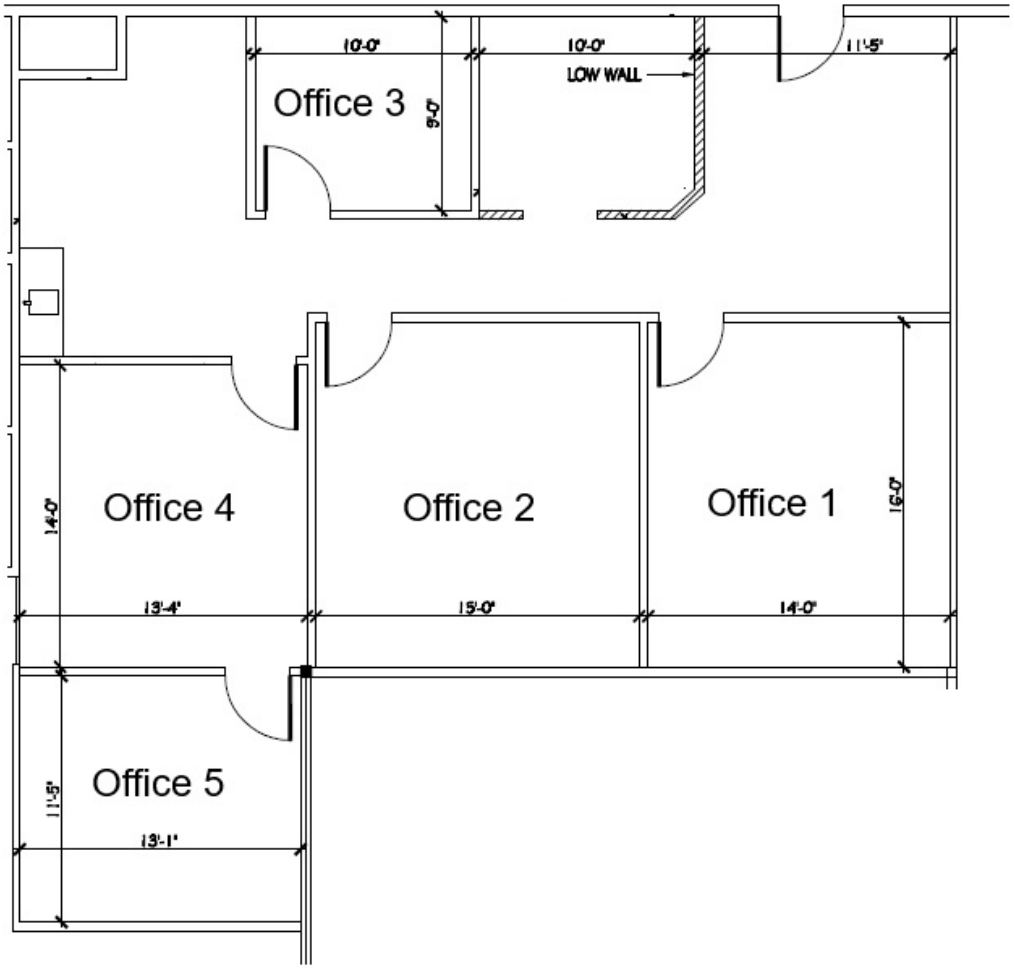

NOT TO SCALE

LEE & ASSOCIATES
COMMERCIAL REAL ESTATE SERVICES

All information furnished regarding the property is from sources deemed reliable, but no warranty or representation is made as to the accuracy thereof. This information is submitted subject to errors, omissions, change of price or terms, prior sale or lease, or withdrawal without notice. No liability of any kind is to be imposed on the broker herein.

FLOOR PLAN: SUITE 287 - 710 RSF

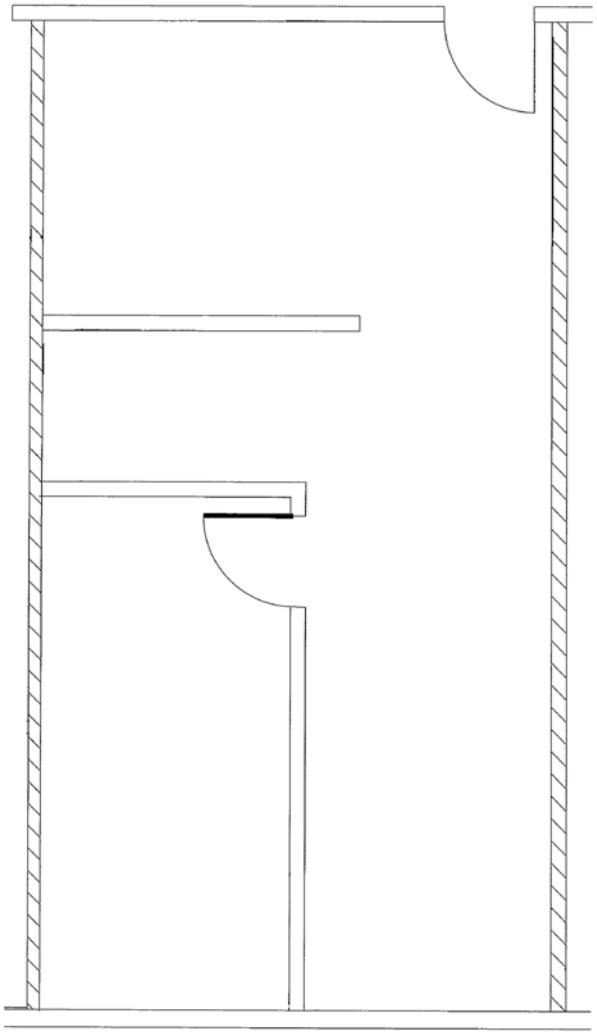

NOT TO SCALE

LEE & ASSOCIATES
COMMERCIAL REAL ESTATE SERVICES

All information furnished regarding the property is from sources deemed reliable, but no warranty or representation is made as to the accuracy thereof. This information is submitted subject to errors, omissions, change of price or terms, prior sale or lease, or withdrawal without notice. No liability of any kind is to be imposed on the broker herein.

FLOOR PLAN: SUITE 292 - 858 RSF

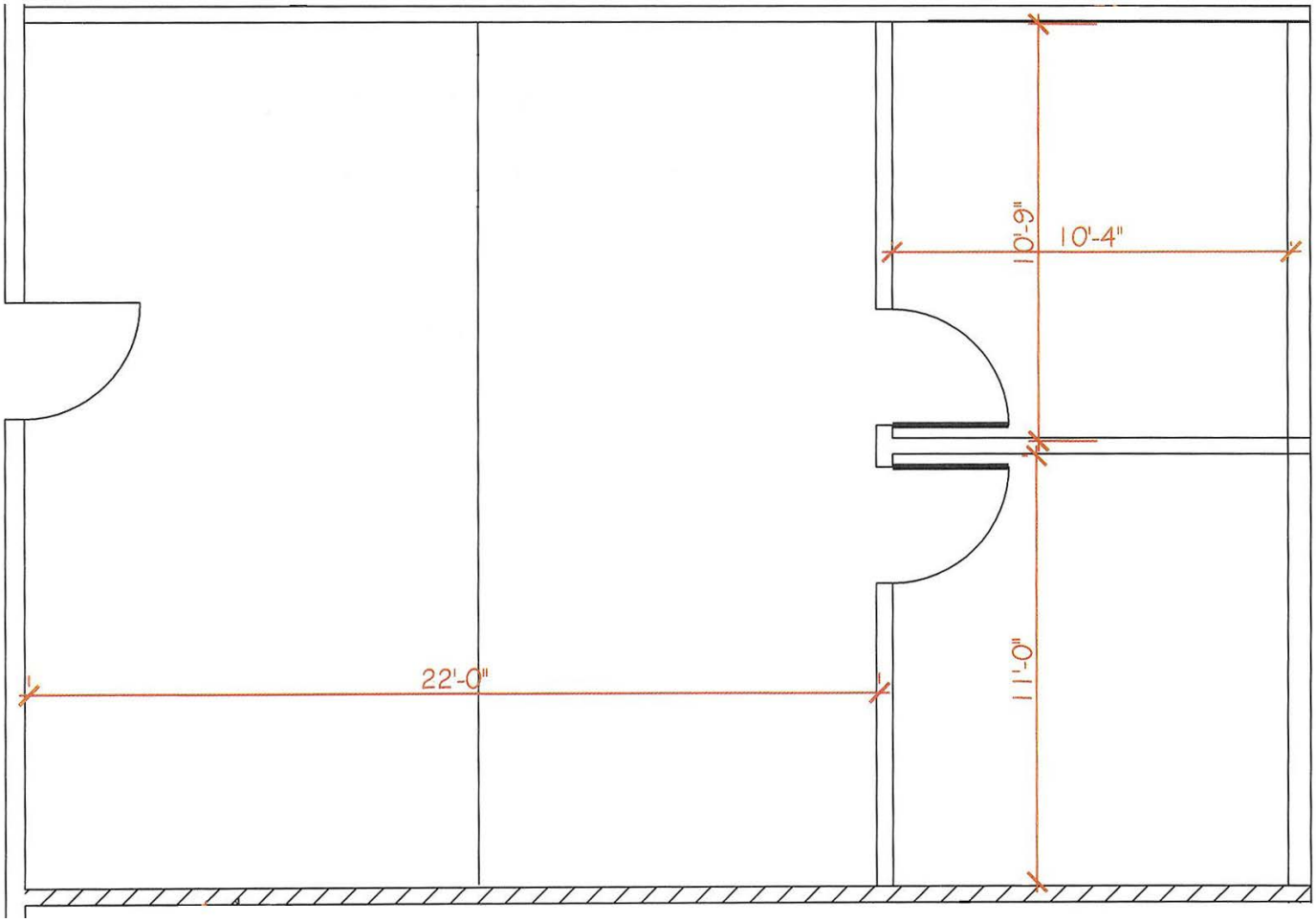

NOT TO SCALE

LEE & ASSOCIATES
COMMERCIAL REAL ESTATE SERVICES

All information furnished regarding the property is from sources deemed reliable, but no warranty or representation is made as to the accuracy thereof. This information is submitted subject to errors, omissions, change of price or terms, prior sale or lease, or withdrawal without notice. No liability of any kind is to be imposed on the broker herein.

6700 Fallbrook Avenue
West Hills, CA

PRIME WEST HILLS
OFFICE SPACE AVAILABLE FOR LEASE

For more information:

Jay Rubin
Principal
818.223.4385
jrubin@lee-re.com
DRE #0132005
Website: www.JayRubin-RE.com

Eugene Kim
Principal
818.444.4919
ekim@lee-re.com
DRE #01521416

ABOUT LEE & ASSOCIATES

Lee & Associates offers an array of real estate services tailored to meet the needs of the company's clients, including commercial real estate brokerage, integrated services, and construction services. Established in 1979, Lee & Associates is now an international firm with 70+ offices throughout the United States and Canada. Our 1,300 professionals regularly collaborate to make sure they are providing their clients with the most advanced, up-to-date market technology and information. For the latest news from Lee & Associates, visit lee-associates.com or follow us on Facebook, LinkedIn, Twitter, and Link, our company blog.

LEE & ASSOCIATES
COMMERCIAL REAL ESTATE SERVICES

Lee & Associates® - LA North/Ventura, Inc.
Corporate ID #01191898
A Member of the Lee & Associates®
Group of Companies
5707 Corsa Ave, Suite 200
Westlake Village, CA 91362
P:818.223.4388 F:818.591.1450

All information furnished regarding the property is from sources deemed reliable, but no warranty or representation is made as to the accuracy thereof. This information is submitted subject to errors, omissions, change of price or terms, prior sale or lease, or withdrawal without notice. No liability of any kind is to be imposed on the broker herein.